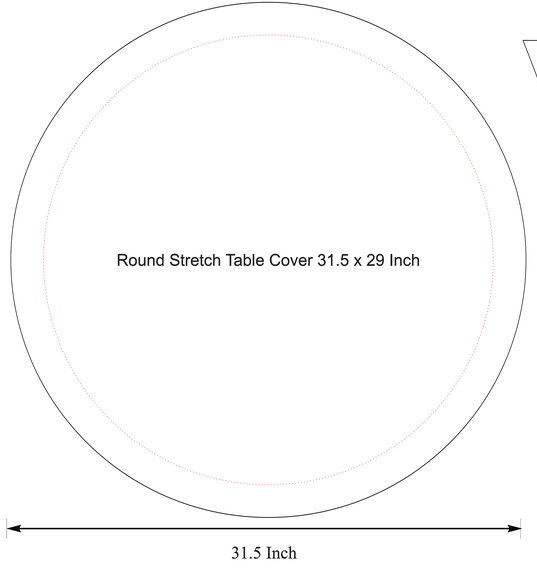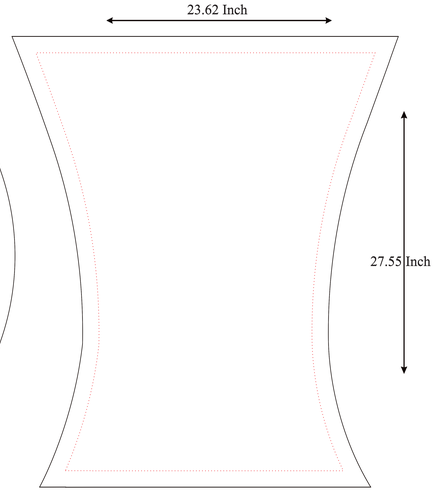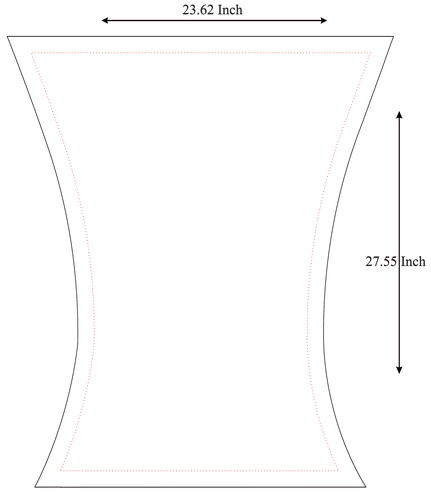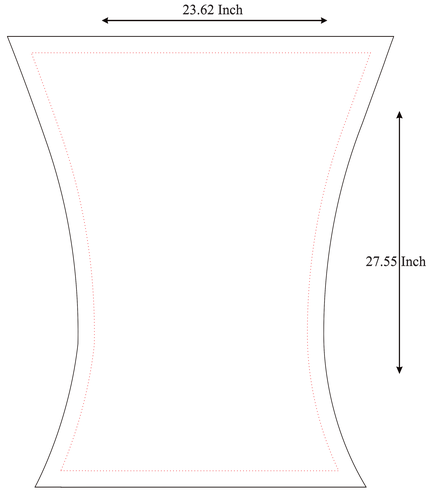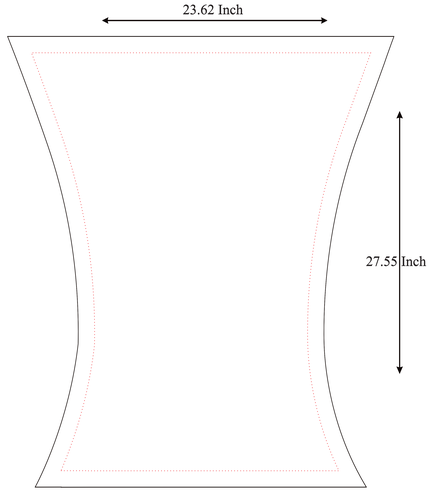Round Stretch Table Cover 31.5 Dia x 29H